Application: Flow Cytometry with LDM CW-Laser Systems

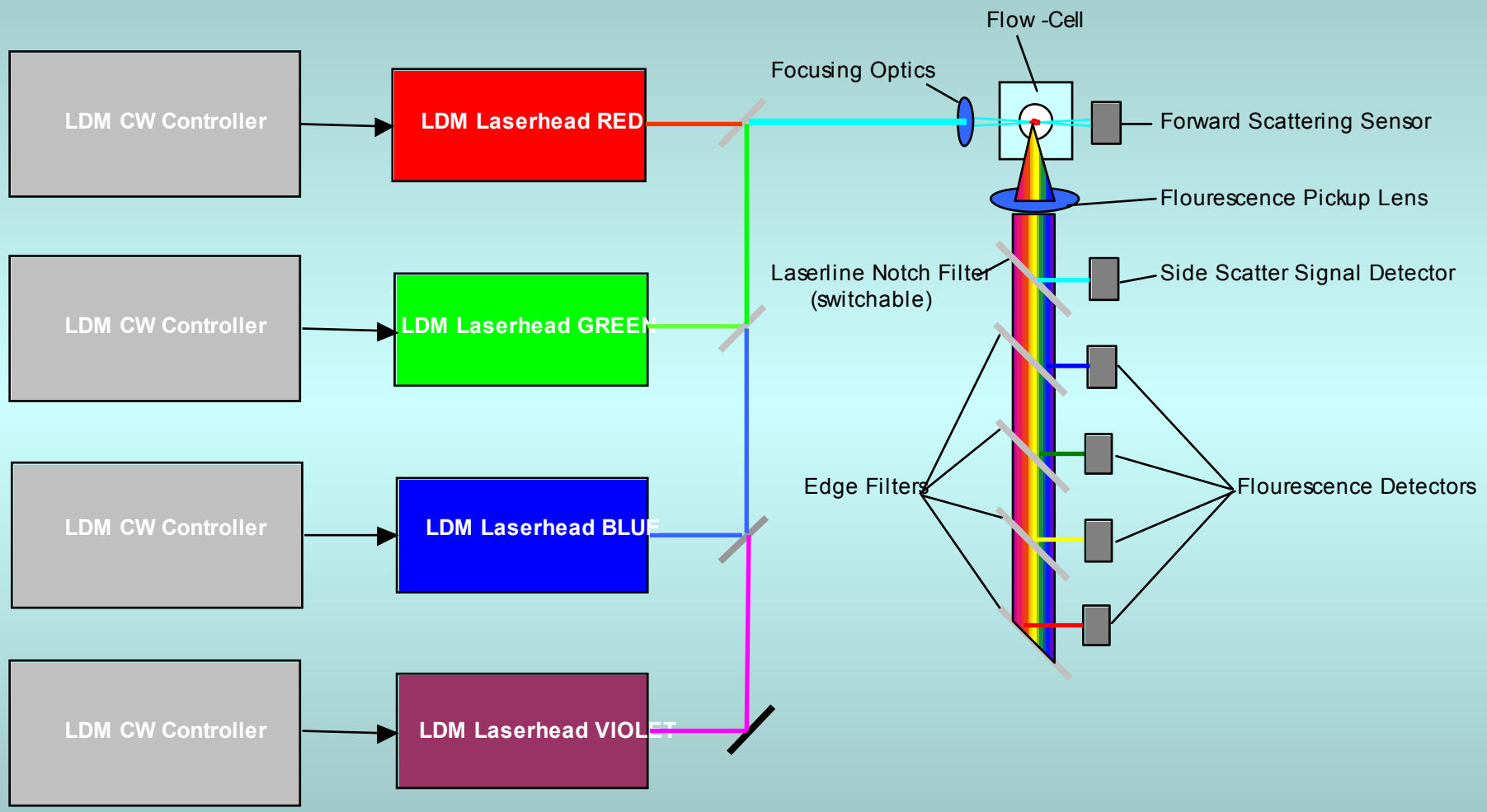

© Omicron Laserage Laserprodukte GmbH, 08/2004